32” Outdoor Digital Advertising Displays

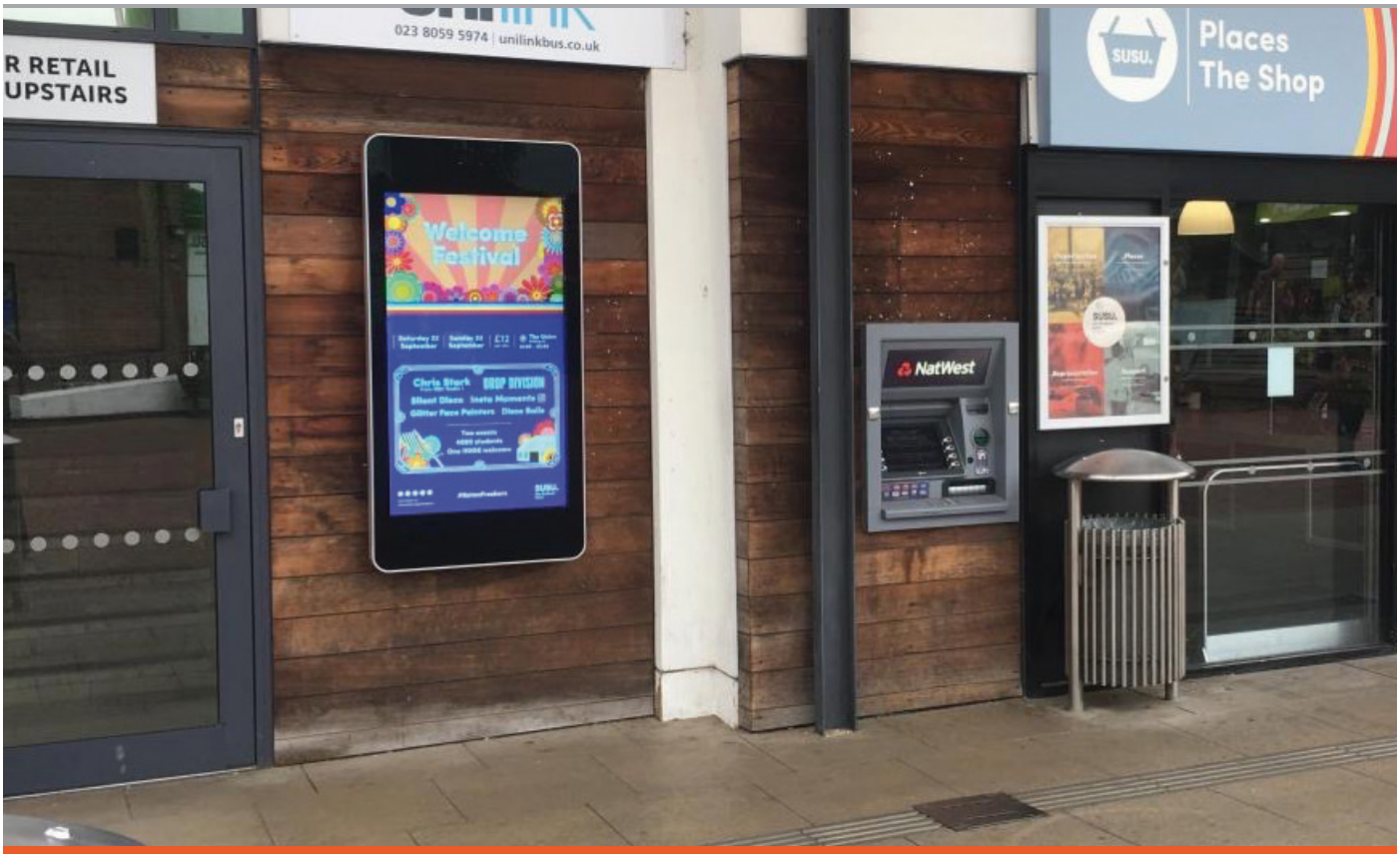

Fully integrated stunning tablet-style displays; perfect for any weather conditions

Direct Sunlight Readable

Thanks to their commercial grade ultra-high brightness panels (2,500cd/m²), these displays are up to 10 times brighter than a domestic TV and so are easily readable even in direct sunlight.





2,500cd/m²

Weatherproof

Designed to withstand the elements, these displays are protected against all wet weather conditions and airborne dust particles by their robust IP65 rated enclosure. They also feature a waterproof coating on all internal circuit boards and waterproof over-moulded AV connectors.

IP65

Dust Resistance

6 Protected against dust that may harm equipment.

Water Resistance

5 Protected against water spray from all directions.



- Vandal Proof
- Advanced Temperature Control System
- Anti-Reflective Glass
- Ambient Light Sensor
- Protective UV Film
- Landscape or Portrait
- Plug and Play
- Vandal Proof Wi-Fi Aerial
- 24/7 Usage
- Customisation Available

Other Features

Vandal Proof

With a mild steel enclosure and thermally-toughened glass front, these IK10 rated displays are designed to withstand any damage that may occur in public spaces. To avoid tampering, controls and inputs are hidden and cannot be accessed by passers-by.



Advanced Temperature Control System

To maximise the lifespan of the display, the internal airflow system keeps the screen running at the optimal temperature regardless of the external conditions. Built-in air conditioning can be tailored to allow the display to work in any climate.

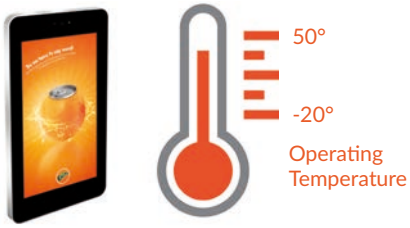

Anti Reflective Glass

The front glass face is specially treated to help diffuse direct sunlight, making the display easily readable even in bright weather conditions.



Ultimate UV Protection

The front glass of the display utilises a special UV treatment that reduces the internal heat of the enclosure by up to 71%; reducing the number of cooling fans needed and increasing the life of your display.



Optional Network Upgrade

The integrated Android media player allows you to easily update on-screen content via USB plug and play. Alternatively, upgrade your screen to be networked without needing any additional hardware to unlock our cloud-based CMS software. Third-party software can be installed instead if required.



Internal Locker

Should you need run the screen from an external source, there is space to fit a small PC or media player inside the lockable compartment. This can then be connected to the display via the HDMI, VGA or 3.5mm audio inputs.



Free Lockable Wall Mount

To ensure that this a complete turnkey solution, a lockable wall mount is included at no extra cost, allowing you to securely mount your screen in either landscape or portrait orientation.



Customisation Available

Bespoke displays can be manufactured to order should you require a non-standard solution, to incorporate a camera or touch screen upgrade for example. We can also modify existing models to add a 4G module for mobile connectivity or a vinyl logo/wrap.



Key Features

2,500 CD/M²
SUNLIGHT READABLE

IP65 RATED

IK10 RATED

VANDAL PROOF HIGH GAIN
WI-FI AERIAL



ANDROID MEDIA PLAYER

PROTECTIVE UV FILM

24/7 USAGE

LANDSCAPE OR PORTRAIT
ORIENTATION



INTERNAL LOCKER



AMBIENT LIGHT SENSOR



FREE LOCKABLE
WALL MOUNT

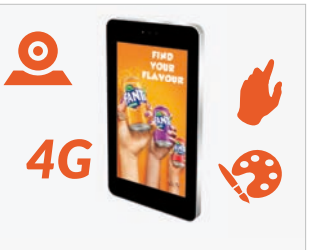

CUSTOMISATION
AVAILABLE

Specification Table

		32 Inch
Panel	Resolution	1920x1080
	Display Area (mm)	702x396
	Aspect Ratio	16:9
	Brightness (cd/m²)	2,500
	Colour	16.7 M
	Viewing Angle	178°
	Contrast Ratio	8000:1
AV Inputs	Video	HDMI, VGA
Power	Power Consumption (W)	190
	Input Voltage	AC110~240V (50Hz~60Hz)
Mechanical	Unit Size (HxWxD mm)	1041x516x130.2
	Package Size (HxWxD mm)	1180x650x300
	Landscape VESA Holes (mm)	340x340
	Portrait VESA Holes (mm)	
	Net Weight (kg)	40
	Gross Weight (kg)	48
	IK Rating	IK10
Environmental	Operating Temperature:	-20 °C to 50 °C
	Operating Humidity:	10% - 80%
	Storage Temperature:	-30°C - 60°C
	Storage Humidity:	5% - 90%
	Enclosure Protection	IP65
Computer	Media Formats	Video (MPG, AVI, MP4, RM, RMVB, TS), Audio (MP3, WMA), Image (JPG, GIF, BMP, PNG)
	Media Resolution	1920x1080/1080x1920
	Internal Memory	6GB
	CPU	Quad-Core Cortex-A17@1.61GHz
	GPU	Mali-T760 MP4 @600MHz
	RAM	2GB DDR3
	Internal Storage	8GB NAND
	USB	USB2.0 HOST (x2)
	LAN	10/100/1000Mb/s Ethernet
	Wi-Fi	802.11b/g/n/ac
	OS	Android 5.1.1
	Graphic Engine	OpenGL ES 1.1/2.0/3.0/3.1, OpenCL 1.1, Renderscript, Direct3D 11.1
Accessories	Included	AC Power Cable, Remote Control, Wall Mount
	Optional	Touch Screen Upgrade, Network Upgrade, Camera
Warranty	Warranty Period	3 Year Warranty
	Technical Support	Lifetime

Errors and omissions excepted



Bracket

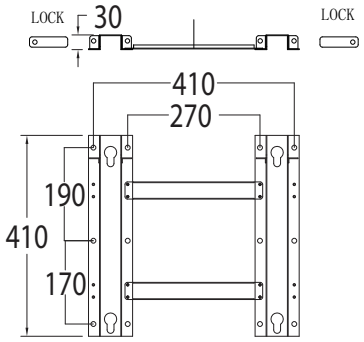
LOCK
30
LOCK
410
270
190
410
170

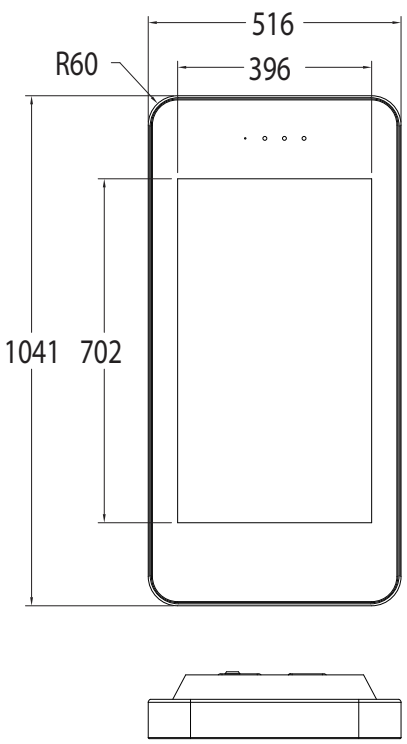
516
R60
396
1041
702

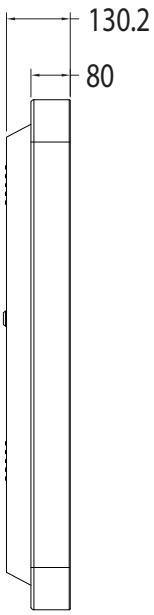
130.2
80

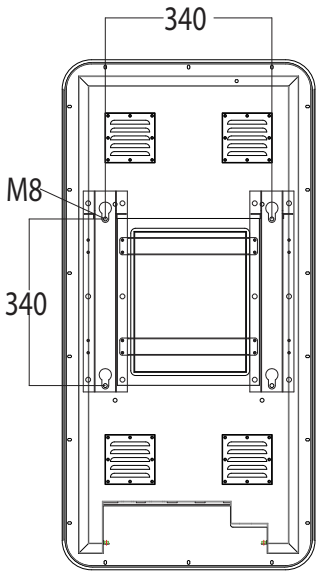
340
M8
340